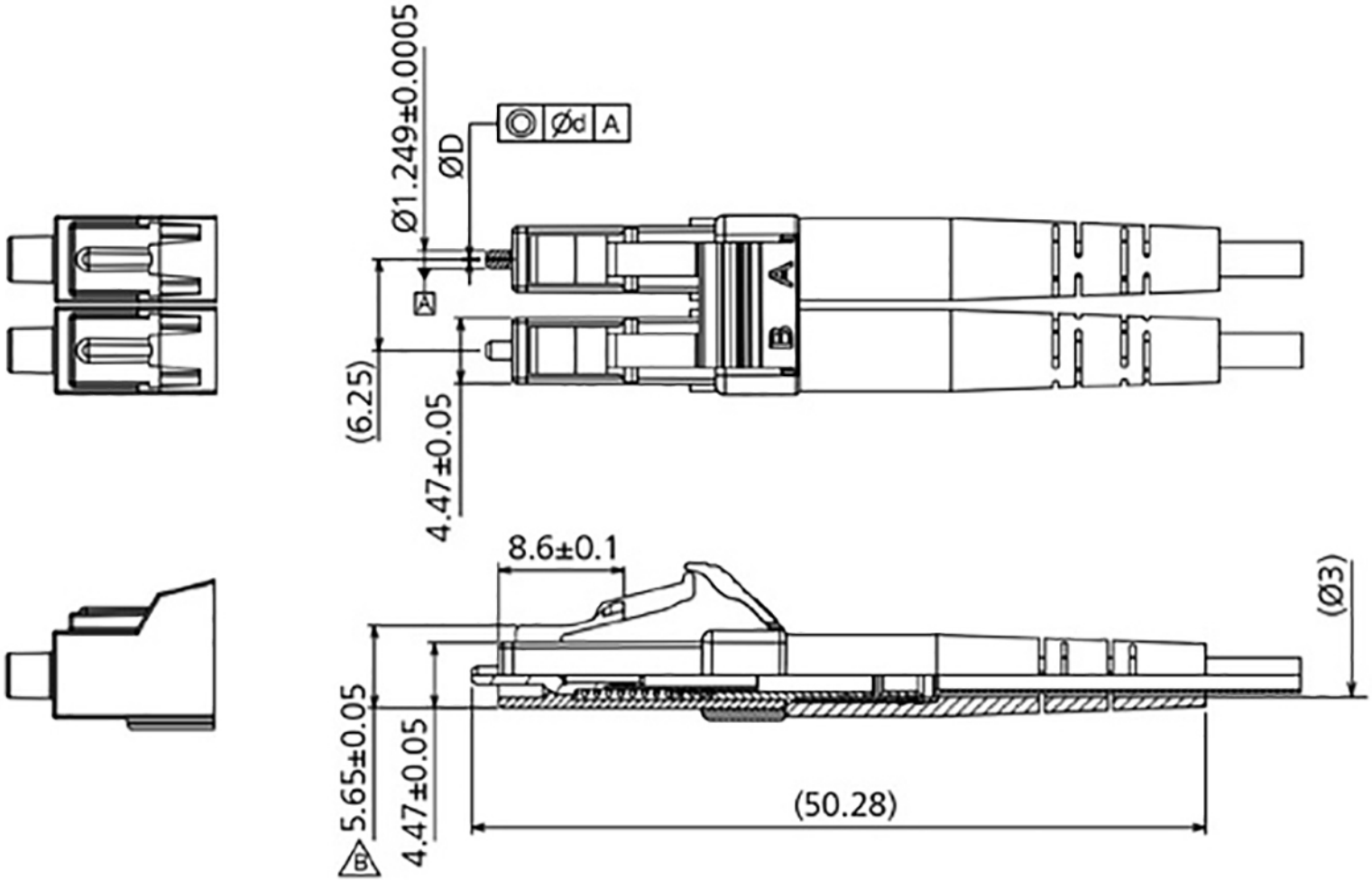Suncall LC Duplex 2.0mm Connector